Otis® Door Operators

Unitec Parts Company®
800-328-7840
www.unitecparts.com

Type A

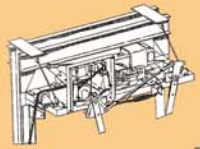

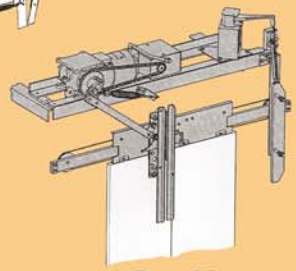

Type AB

Type 30-S

Type O

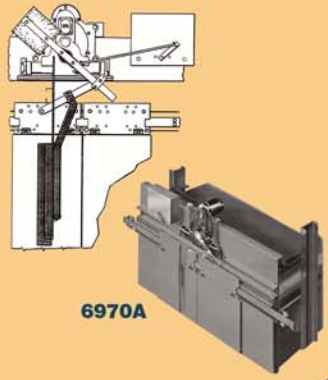

6970A

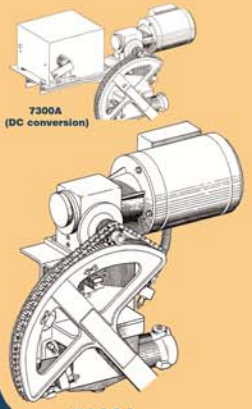

7300A
(DC conversion)

7300A

Most Common Spare Parts List		
Operator Type	Part Number	Description
A Operator (***)	(***)	(***)
AB (***)	A332A51	Chain, 7.2 in. L
	91W2, 3, 4	Spring, Ext'n
Type 'O' and O-1	A6393A54	31ES Motor, AC
	VP-814551	1/3 HP Motor, DC
	353Y1	Disc, Rubber 3 in.
	74358	Chain Hitch Lug
	416P1	Brake Lining
30-S (***)	(Obsolete)	Chain
	(Obsolete)	Spool Drum
F (Vertical Doors)	(Rewind Local)	Geared Motor
	332AM4-L	Climber Chain
	332AM5-L	Power Chain
	332AV-L	Relating Chain
	456AS2	Roller, Relating Chain
	195OJ2	Motor Sprocket, 12T
	195AV3	Motor Sprocket, 16T
	195CN3	Motor Sprocket, 32T
	A217AJ2	Shoe, Door Guide
7300A Operator #	6333AM1	Motor, 220 VAC
	633BX1	Motor, 220 VAC
	195GK2	Sprocket, Motor
	332BC2	Chain w/Stud Ends
	320BE2	Chain Bushing
	177AJ1	Microswitch SPDT
6970 Operator	E6970A501	Seals Kit
	E6970A500	Comp. Rebuild Kit
	6333AJ1	Motor
7660A (***)	(***)	(***)
7770A Operator	6333CC13, 14	Gearmotor
7770R Operator	6333CC15, 16	Gearmotor
7770A and R	332BC2	Chain w/Stud Ends
	177AJ1	Microswitch SPDT
7777A (Screw) #	A456FC1	Roller, Hanger
	AAA456ZE2	Roller, Upthrust
QL Operators	AAA717J1, 2, 3	Belt
	AAA6333EZ1	Motor
	AAA7782AY400	Cam Set and Shaft
	AAA332BM500	Chain and Belt Upgrade
	AAA332BM3	Chain Upgrade Kit
	288TJ*	Drive Arm, Aluminum
	395E1 through 4	Pulley Arm, Drive
	395F1 or F2	Transmission Arm
OVL Operator	JO332J1 through 4	Chains
	ACA327MS3	Cam, Split
	JO320AS2	Stop Bumper
	JO195AN* Type	Sprocket, Motor
	JAA26901AAE101	Set, Contact Finger
HPLIM Operator	AAA6333EH1	Gearmotor
	AAA50ATR1-1600	Guide, Secondary
	AAA24450P1	Encoder Assembly
	ABA24450N1	Brake Assembly
	AAA24350AK*	Copper Secondary
i-MOTION Operator	AAA717J1, 2, 3	Belt
	AAA6333EZ1	Motor
	395E4	Pulley Arm, Drive
	395F2	Transmission Arm
	AAA608D8	Sensor
i-MOTION II Operator	AAA717L1	Belt
	AAA6333EZ1	Motor
	AAA332BM2	Chain
	ABA2680AED*	PC Board
	AAA608D8	Sensor
Black Belt Operator	AAA717T1	Belt
	AAA26800AHJ1	PC Board
	AAA24350BL3, 4	Gearmotor
	609BMV2	Gate Switch
AT400 Operator	AAA717T*	Belt
	AAA24350BL1, 2	Gearmotor
	AAA25580AL*	Controller
	AAA24431B1	Inductor Prox. Switch
	AAA25590T or W	Gate Switch Assembly
	AAA661B101	Gate Switch Cont.

* Part number varies. Specify based on contract conditions.

NOTE: Distinguish i-MOTION operators from late version QL operators by large control box with integral stop switch and no contact finger type campack.

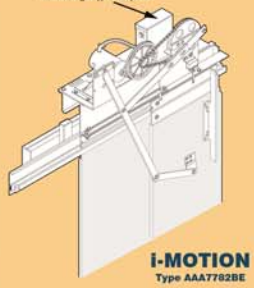

i-MOTION
Type AAA7782BE

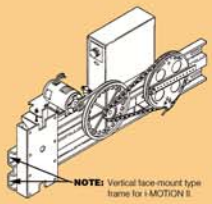

NOTE: Vertical face-mount type frame for i-MOTION II.

i-MOTION II
Type AAA24350BH

NOTE: Distinguish this operator from AT400 by: no top viewing glass and has on board keypad.

Black Belt
Type AAA24350BN

Upgrade to

Upgrade to

NOTE: Distinguish this operator from Black Belt Operator by: Has top viewing glass to access on board learn run buttons and tell tale lights.

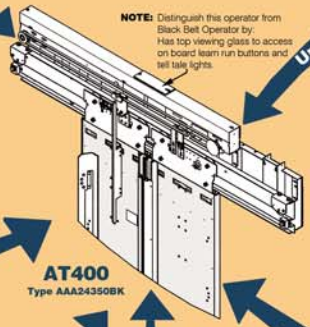

AT400
Type AAA24350BK

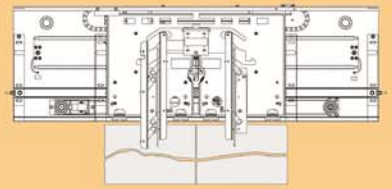

HPLIM
Types: AAA24450D
AAA24470F

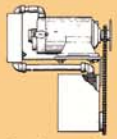

(car gate operator)

(vertical door operator)
Type F

7770A Upgrade to

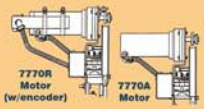

7770R
Motor
(w/encoder)

7770A
Motor

7770A
7770R

Upgrade to

Upgrade to

Upgrade to

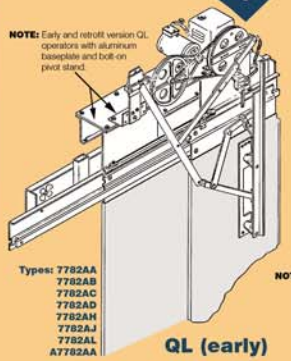

NOTE: Early and retrofit version QL operators with aluminum baseplate and bolt-on pivot stand.

Types: 7782AA
7782AB
7782AC
7782AD
7782AH
7782AJ
7782AL
A7782AA

QL (early)

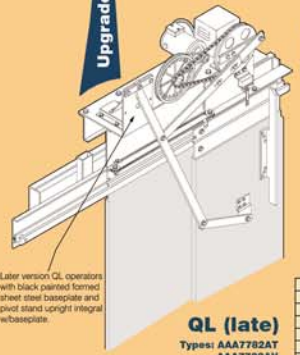

NOTE: Later version QL operators with black painted formed sheet steel baseplate and pivot stand upright integral w/baseplate.

QL (late)
Types: AAA7782AT
AAA7782AV
AAA7782AW
AAA7782AX

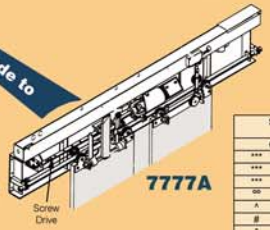

Screw
Drive

7777A

Service Status (see Key)	
Operator Type	
***	'A'
***	'AB'
***	30-S
oo	'O'
^	6970A
#	7300A
*	'F'
*** oo	7660A
#	7770A
*, %	7770R
#	7777A
@, #, ^	QL (early vintage)
@, #, ^	QL (late vintage)
@	OVL
@	i-MOTION
@, %	i-MOTION II
@, %	Black Belt
@, %	AT400
@	HPLIM

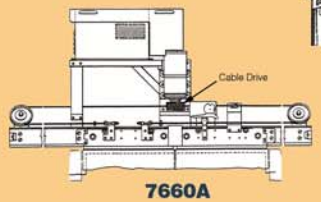

7660A

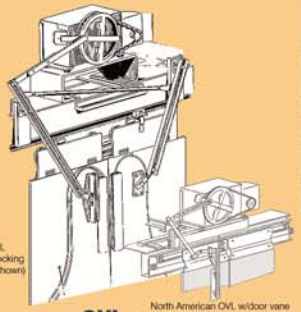

Nippon OVL
w/OVL unlocking
vane (c/o shown)

North American OVL w/door vane
for 6940 interlock (c/o shown)

OVL
YX10200 Series

Key	Spare Parts Support
***	Obsolete or Very Limited Spare Part Support—Consider Modernizing
oo	Little Spare Part Support—Upgrade to AT400
^	Rebuild Kits Available
#	Use Pre-Engineered or Generic Package Adapting AT400
*	Most Spare Parts Supported
@	Full Spare Part Support—More Contemporary Operator
%	Closed Loop Control

© 2007 Unitec® is a registered trademark of Otis Elevator Company, Farmington, CT.