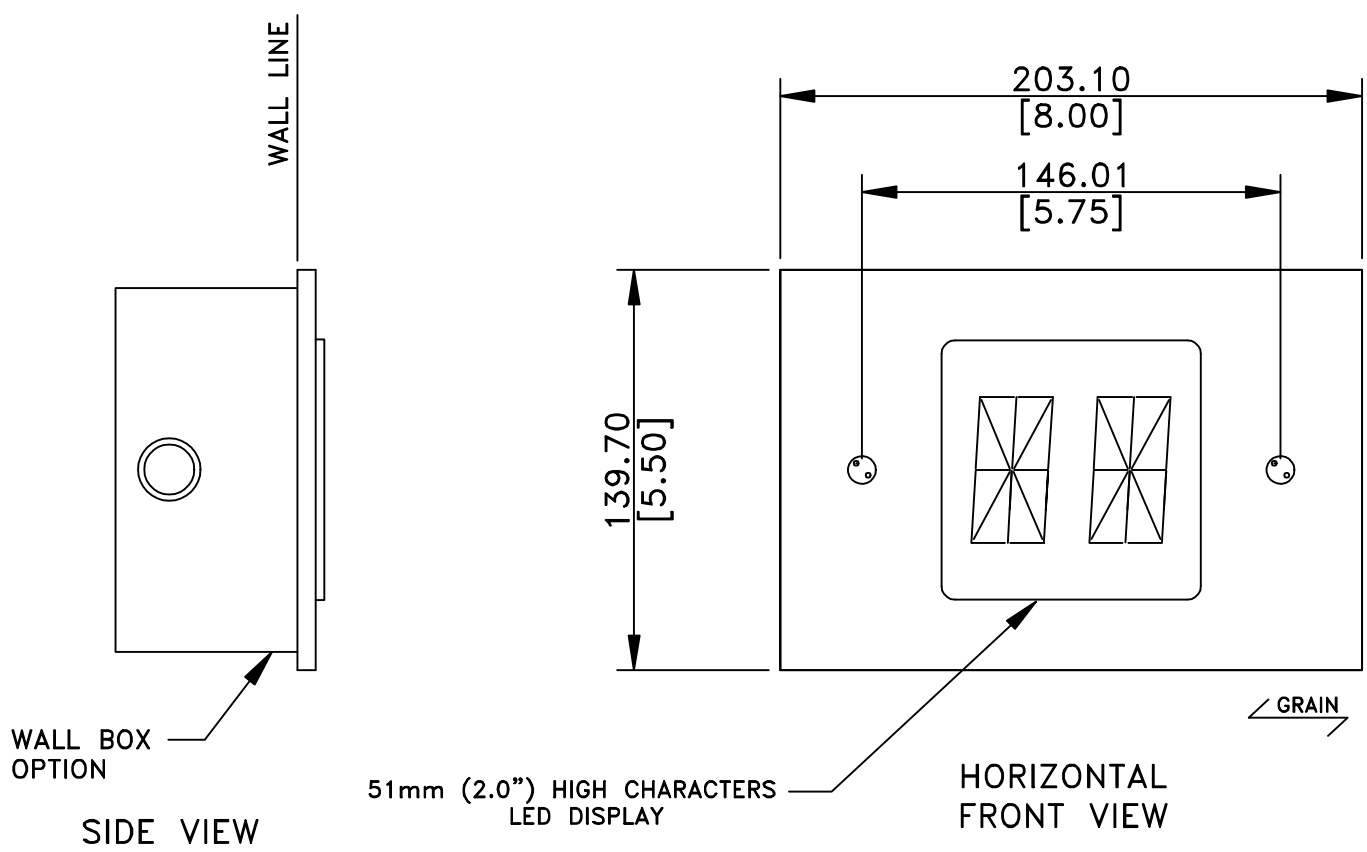

QTY ( )

☐ – HORIZONTAL (SHOWN)
☐ – VERTICAL

☐ – SERIAL
☐ – DISCRETE

☐ 30 VDC
☐ 120 VAC

WALL BOXES:
127mm (5.0") WIDE
173mm (6.82") LONG
89mm (3.5") DEEP

FACEPLATE MATERIAL:

– (1/8") 3,2mm STAINLESS STEEL, OTIS #4

REVISIONS	REV. #	DATE	INITIALS	DESCRIPTION

CONTRACT #:	MACHINE#:	APPROVAL DRAWING HALL POSITION IND.			
QUANTITY					
MAIN	ELEVATOR#:	DRAWING NUMBER:	WARNING	UNITEC EXCELLENCE FROM THE GROUND UP	DRAWN: / CHK: / ORIGINAL DATE: / SHEETS / SHEET
AUX					OTIS SERVICE CENTER 312 WEST NEWBERRY ROAD BLOOMFIELD, CT 06002 FIXTURES ENGINEERING DEPARTMENT

WARNING
SIGNING THIS DRAWING CONSTITUTES ACCEPTANCE OF WHAT IS SHOWN–REFER TO TRANSMITTAL

LOCAL OFFICE REPRESENTATIVE _____ ARCHITECT _____ CONSULTANT _____ BUILDING REPRESENTATIVE _____